TAROT

450 Super Combo PRO FBL

INSTRUCTION MANUAL

使用说明书

Programmable

3Axis MEMS Easy Energy Stable T-REX 250~700 400Hz 3.5V~8.4V 9.8g RoHS

Thank you for buying Tarot products. the Tarot 450 PRO FBL is the latest technology in Rotary RC models. Please read this manual carefully before assembling and flying the new Tarot 450PRO FBL helicopter . We recommend that you keep this manual for future reference regarding tuning and maintenance.

欢迎选购温州飞越航模系列产品，以表谢意。进入遥控世界之前必须告诉您许多相关的知识与注意事项，以确保您能够在学习的过程中较得心应手。在开始操作之前，请务必详阅本说明书，相信一定能够给您带来相当大的帮助也请您妥善保管这本说明书，以作为日后参考。

1.INTRODUCTION 前言

Thank you for buying Tarot Products . The Tarot 450 PRO FBL Helicopter is designed as an easy to use, full featured Helicopter R/C model capable of all forms of rotary flight . Please read the manual carefully before assembling the model, and follow all precautions and recommendations locate within the manual . Be sure to retain the manual for future reference , routine maintenance, and tuning . The TAROT 450PRO FBL is a new product developed by FeiYue.It features the beast design available on the Micro-Heli market to date,providing flying stability for beginners , full aerobatic capability for advanced fliers , and unsurpassed reliability for customer support.

感谢您选购温州飞越产品，为了让你容易方便的装配TAROT 450 PRO FBL直升机，请您参考详细的阅读完这本说明书之后在进行组装以及操作这台直升机，同时请您妥善的保存这本说明书，作为日后进行调整以及维修的参考，TAROT 450 PRO FBL是有温州飞越新产品，不论您是需求飞行稳定性的初学者还是追求性能的飞行爱好者。TAROT 450 PRO FBL将是您最佳的选择。

THE MEANING OF SYMBOLS 標誌代表涵義

WARNING 警 告	**Mishandling due to failure to follow these instructions may result in damage or injury.** 因爲疏忽這些操作說明，而使用錯誤可能造成財產損失或嚴重傷害。
CAUTION 注 意	**Mishandling due to failure to follow these instructions may result in danger.** 因爲疏忽這些操作說明，而使用錯誤可能造成危險。
FORBIDDEN 禁 止	**Do not attempt under any circumstances.** 在任何禁止的環境下，請勿嘗試操作。

IMPORTANT NOTES 重要聲明

R/C helicopters,including the **TAROT** ***450 PRO FBL are not toys.*** **R/C helicopter utilize various high-tech products and Technologies to provide superior performance. Improper use of this product can result in serious injury or even death. Please read this manual carefully before using and make sure to be conscious of your own personal safety and the safety of others and your environment when operating all TAROT products.**

Manufacturer and seller assume no liability for the operation or the use of this product.

Intended for use only by adults with experience flying remote control helicopters at a legal flying field. After the sale of this product we cannot maintain any control over its operation or usage.

TAROT 450 PRO FBL 遙控直升機並非玩具,它是結合了許多高科技產品所設計出來的休閑用品,所以商品的使用不當 或不熟悉都可能會造成嚴重傷害甚至死亡,使用之前請務必詳讀本說明書,勿輕忽並注意自身安全. 注意!任何遙 控直升機的使用,製造商和經銷商是無法對使用者於零件使用的損耗異常或組裝不當所發生之意外負任何責任,本產品是提供給有操作過模型直升機經驗的成人或有相當技術的人員在旁指導於當地合法遙控飛行場飛行,以 確保安全無誤下操作使用,產品售出後本公司將不負任何操作和使用控制上的任何性能與安全責任.

We recommend that you obtain the assistance of an experienced pilot before attempting to fly our products for the first time.A local expert is the best way to properly assemble, setup,and fly your model for the first time.the TAROT 450 PRO FBL requires a certain degree of s kill to operate,and is a consumer item.Any damage or dissatisfaction as a result of accidents or modifications are not covered by any warrantee and cannot be returned for repair of experience problems during operation or maintenance

模型商品屬於需高操作技術且為消耗性質商品,如輕拆裝使用後,會造成不等情況零件損耗,任何使用情況所造成商品不良或不滿意,槳無法於保固條件內更換新品或退貨,如遇有使用操作維修問題,本公司或代理商將提供技術指導和特價零件供應服務.

2.SAFETY NOTES 安全注意事項

CAUTION 注 意

Fly only in safe areas, away from other people, Do not operate R/C aircraft within the vicinity of homes or crowds of people. R/C aircraft are prone to accidents, failures, and crashes due to a variety of reasons including, lack of maintenance, pilot error, and radio interference. Pilots are responsible for their actions and damage or injury occurring during the operation or as of a result of R/C aircraft models.

遙控模型飛機、直昇機屬高危險性商品，飛行時務必遠離人群，人爲組裝不當或機件損壞、電子控制設備不良，以及操作上的不熟悉、都有可能導致飛行失控損傷等不可預期的意外，請飛行者務必注意飛行安全，並需了解自負疏忽所造成任何意外之責任。

FORBIDDEN 禁 止 LOCATE AN APPROPRIATE LOCATION 遠離障礙物及人群

R/C helicopters fly at high speed, thus posing a certain degree of potential danger. Choose an a legal flying field consisting of flat, smooth ground without obstacles. Do not fly near buildings, high voltage cables, or tress to ensure the safety of yourself, others and your model. For the first practice, please choose a legal flying field and can use a training skid to fly for reducing the damage. Do not fly your model in inclement weather, such as rain, wind, snow or darkness.

直昇機飛行時具有一定的速度，相對的也潛在著危險性，場地的選擇也相對的重要，請需遵守當地法規到合法搖控飛行場地飛行。必須注意周遭有沒有人、高樓、建築物、高壓電線、樹木等等，避免操控的不當造成自已與他人財產的損壞。初次練習時，務必選擇在空曠合法專屬飛行場地並適當搭配練習架練習飛行，這對飛行失誤所造成的損傷將會大幅的降低。
請勿在下雨、打雷等惡劣天候下操作，以確保本身及機體的安全。

FORBIDDEN 禁 止 PREVENT MOISTURE 遠離潮濕環境

R/C models are composed of many precision electrical components.
It is critical to keep the model and associated equipment away from moisture and other contaminants. The introduction or exposure to water or moisture in any form can cause the model to malfunction resulting in loss of use, or a crash. Do not operate or expose to rain or moisture.

直昇機內部也是由許多精密的電子零組件組成，所以必須絕對的防止潮濕或水氣，避免在浴室或雨天時使用，防止水氣進入機身內部而導致機件及電子零件故障而引發不可預期的意外！

FORBIDDEN 禁 止 PROPER OPERATION 勿不當使用本產品

Please use the replacement of parts on the manual to ensure the safety of instructors. This product is for R/C model, so do not use for other purpose.
请勿自行改造加工，任何的升级改装或维修，请使用温州飞越产品目录中的零件，以确保结构的安全。
请确认在产品接线中操作，请勿过载使用，并勿在俺安全，法令外其它非法用途。

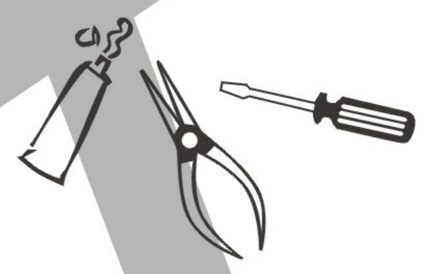

WARNING 警 告 OBTAIN THE ASSISTANCE OF AN EXPERIENCED PILOT 避免獨自操控

Before turning on your model and transmitter, check to make sure no one else is operating on the same frequency. Frequency Interference can cause your model, or other models to crash. The guidance provided by an experienced pilot will be invaluable for the assembly, tuning, trimming, and actual first flight. (Recommend you to practice with computer-based flight simulator.)

至飛行場飛行前，需確認是否有相同頻率的同好正進行飛行，因為開啓相同頻率的發射機將導致自已與他人立即干擾等意外危險。遙控飛機操控技巧在學習初期有著一定的難度，要盡量避免獨自操作飛行，需有經驗的人士在旁指導，才可以操控飛行。
(勤練電腦模擬器及老手指導是入門必要的選擇)

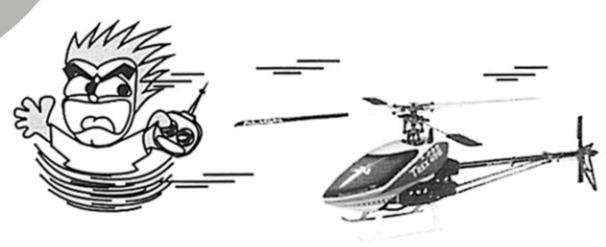

WARNING 警 告 SAFE OPERATION 安全操作

Operate this unit within your ability. Do not fly under tired condition and improper operation may cause in danger.

請於自已能力內及需要一定技術範圍內操作這台直昇機，過於疲勞、精神不佳或不當操作，意外發生風險將可能會提高。

CAUTION 注 意 ALWAYS BE AWARE OF THE ROTATING BLADES 遠離運轉中零件

During the operation of the helicopter, the main rotor and tail rotor will be spinning at a high rate of speed. The blades are capable of inflicting serious bodily injury and damage to the environment. Be conscious of your actions, and careful to keep your face, eyes, hands, and loose clothing away from the blades. Always fly the model a safe distance from yourself and others, as well as surrounding objects. Never take your eyes off the model or leave it unattended while it is turned on. Immediately turn off the model and transmitter when you have landed the model.

當直昇機主旋翼與尾旋翼運轉時，切勿觸摸並遠離任何物件，以避免造成危險及損壞。

CAUTION 注 意 KEEP AWAY FROM HEAT 遠離熱源

R/C models are made up various forms of plastic. Plastic is very susceptible to damage or deformation due to extreme heat and cold climate. Make sure not to store the model near any source of heat such as an oven, or heater. It is best to store the model indoors, in a climate-controlled, room temperature environment.

遙控飛機多半是以 PA 纖維或聚乙烯、電子商品為主要材質，因此要盡量遠離熱源、日曬，以避免因高溫而變形甚至熔毀損壞的可能。

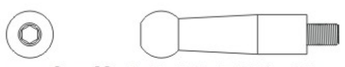

Linkage ball A(M2.5X3.3)
球头A(M2.5X3.3)Ø4.75X20.4mm

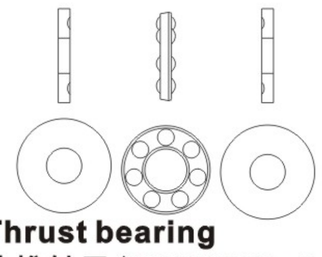

Thrust bearing
止推轴承（Ø3XØ8X3. 5mm）X2

Washer
華司（Ø5.5xØ8x0.4）x2

Bearing
轴承（Ø4XØ8X3mm）X4

Thrust bearing and washer for radial bearing are wear items, and thus should be Inspected for replacement after every 20 flights. For flights with high headspeed, the Inspection Interval should be reduced to ensure flight safety.
止推轴承及横轴垫圈属于飞行消耗品,
建议每20趟定期检查及更换,
高主旋翼转速飞行时,
请缩短定期检查之趟数,以确保飞行安全.

CAUTION
注意

For origin al manufactory pack age, if the product is already assembled by Factory, Please check again if screws are firmly secured and applied with some glue.
原厂零件出厂包装如果是组装品,请需再确认各螺丝是否锁紧上胶.

Apply a little am ount of T43 thread lock when fixing a metal part
螺丝胶附于金属件请使用适量T43(螺丝胶)

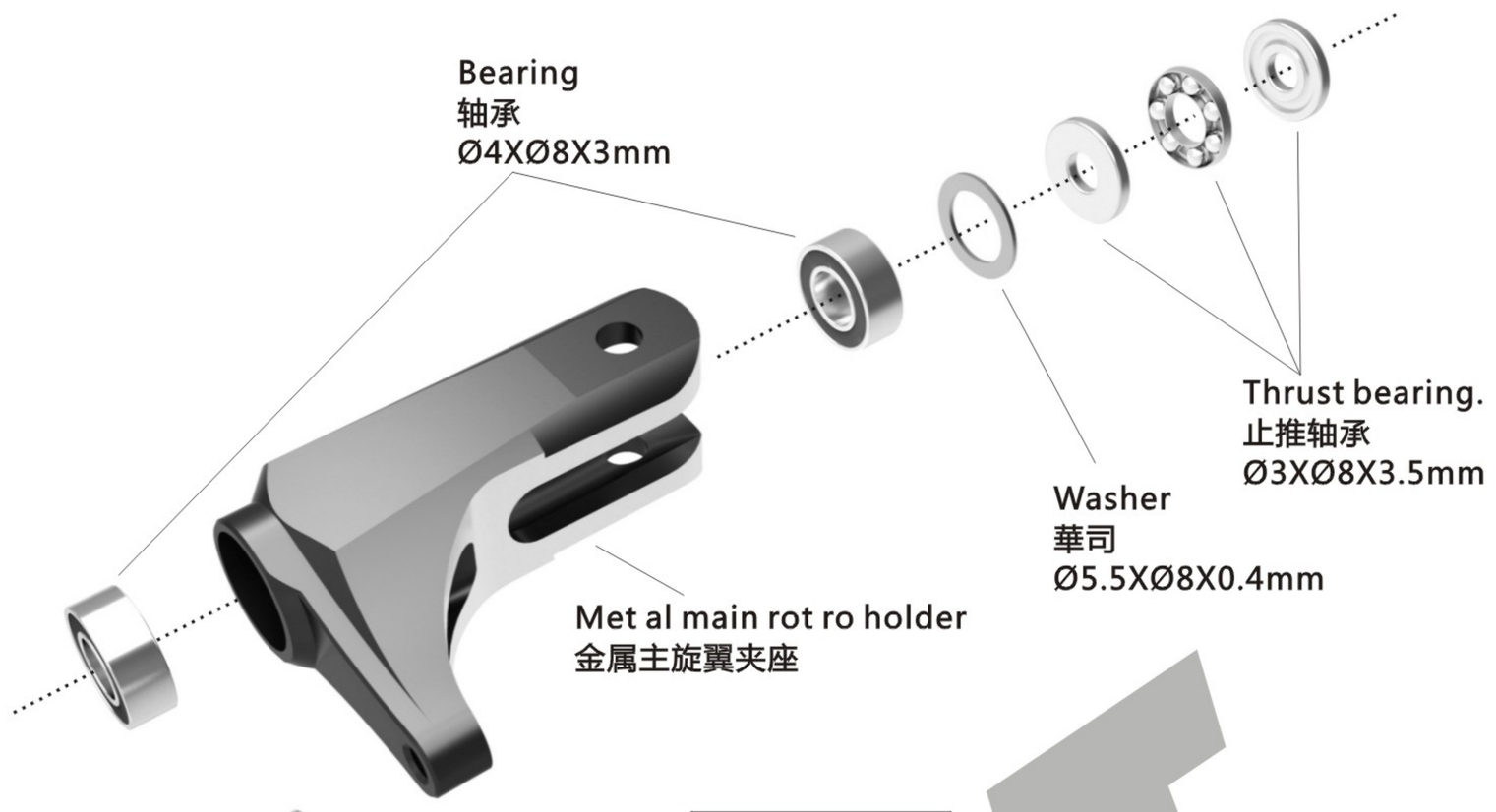

CAUTION
注意

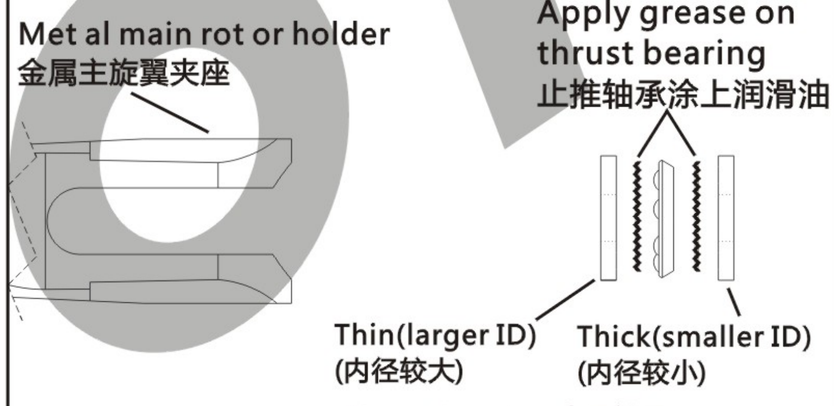

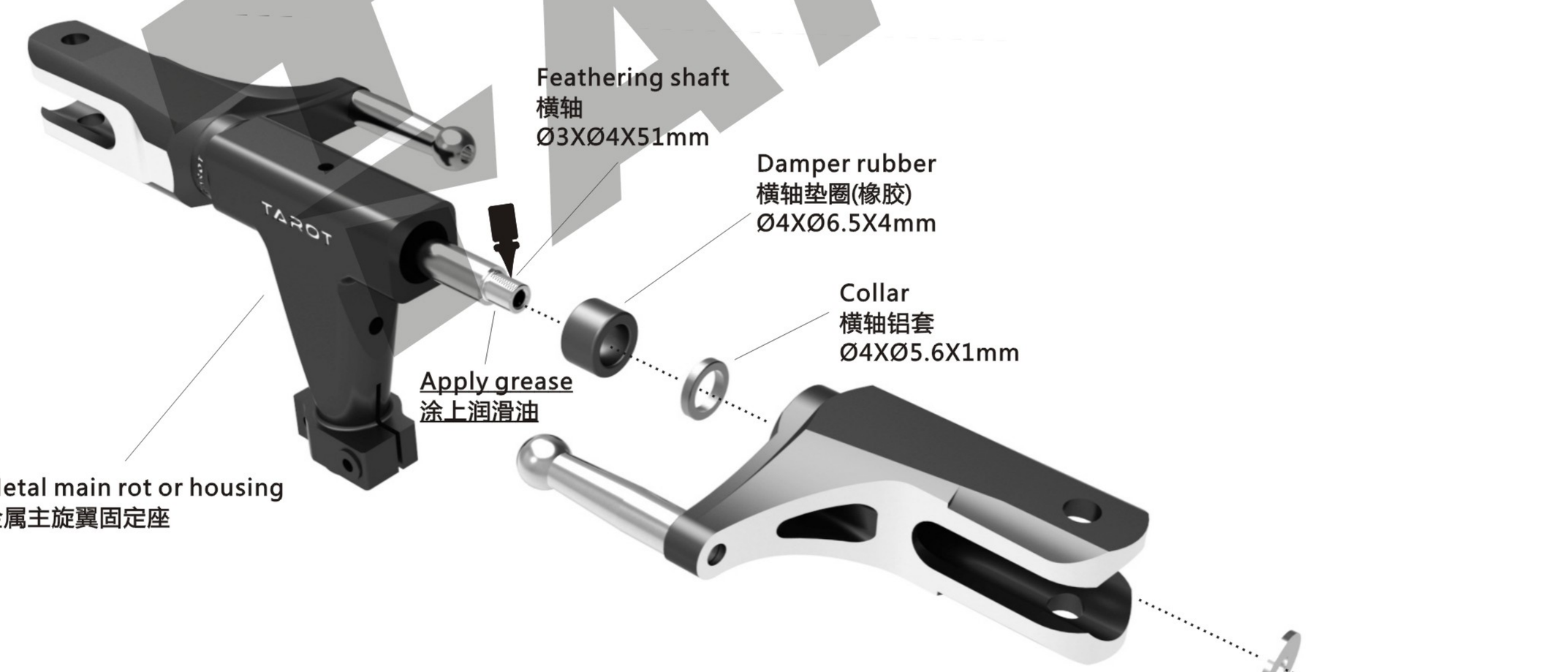

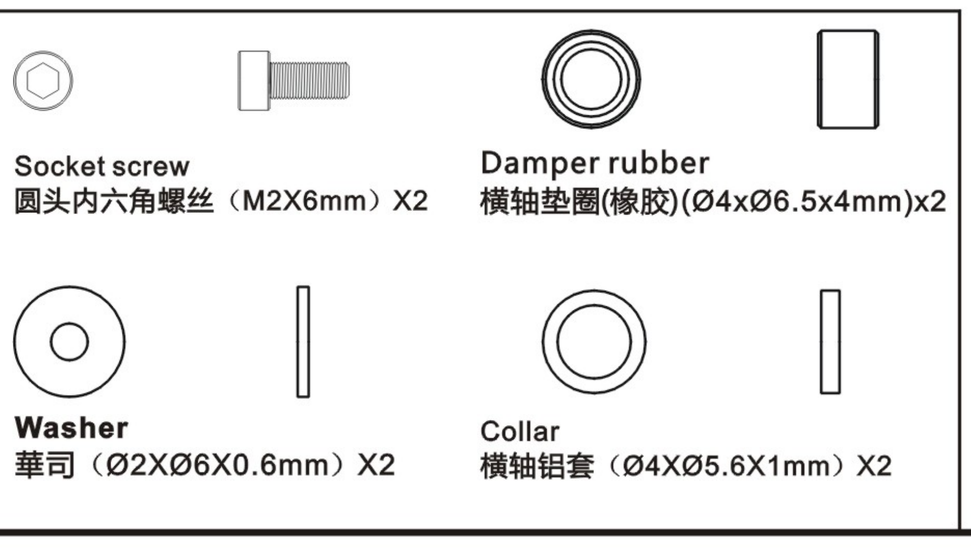

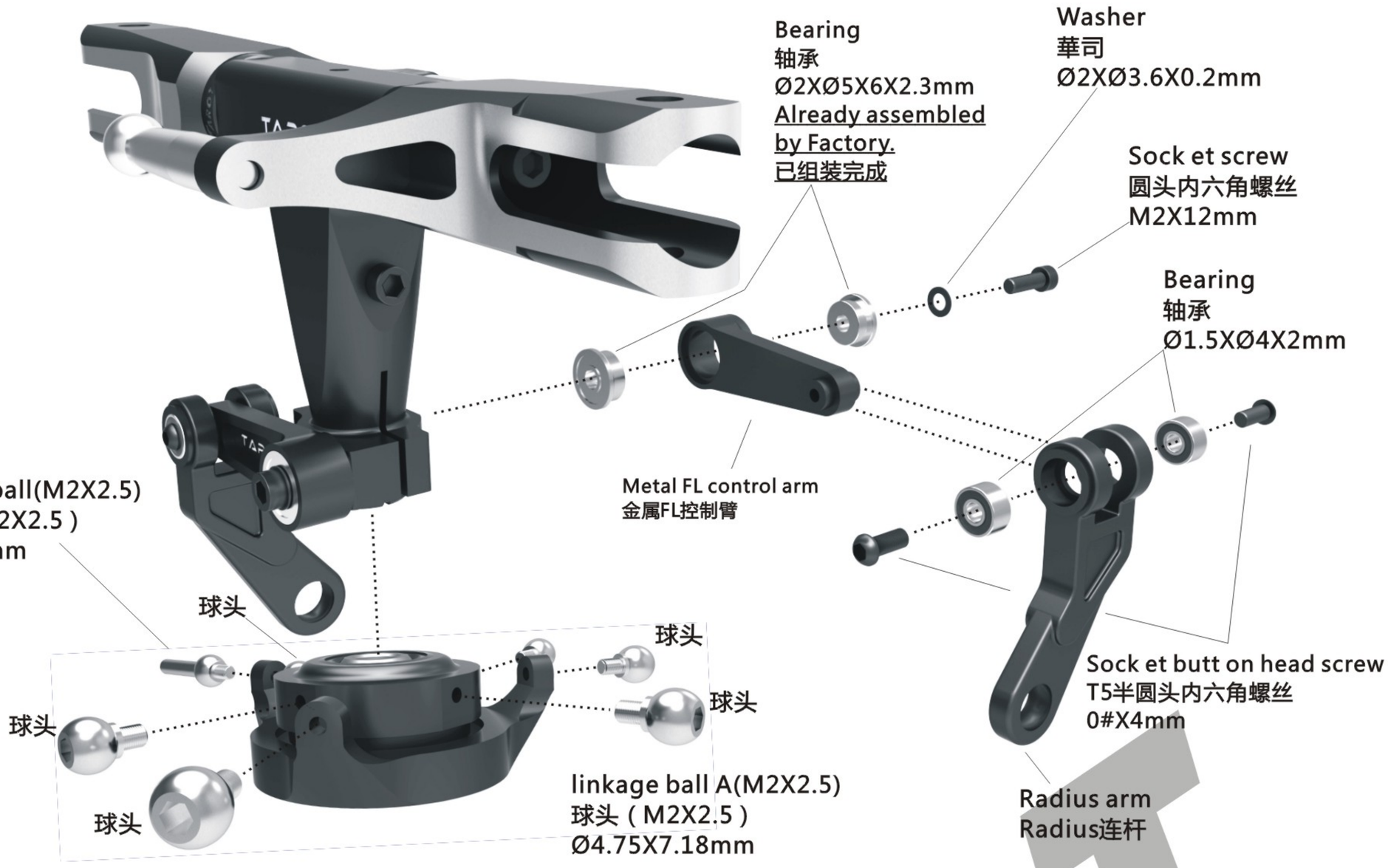

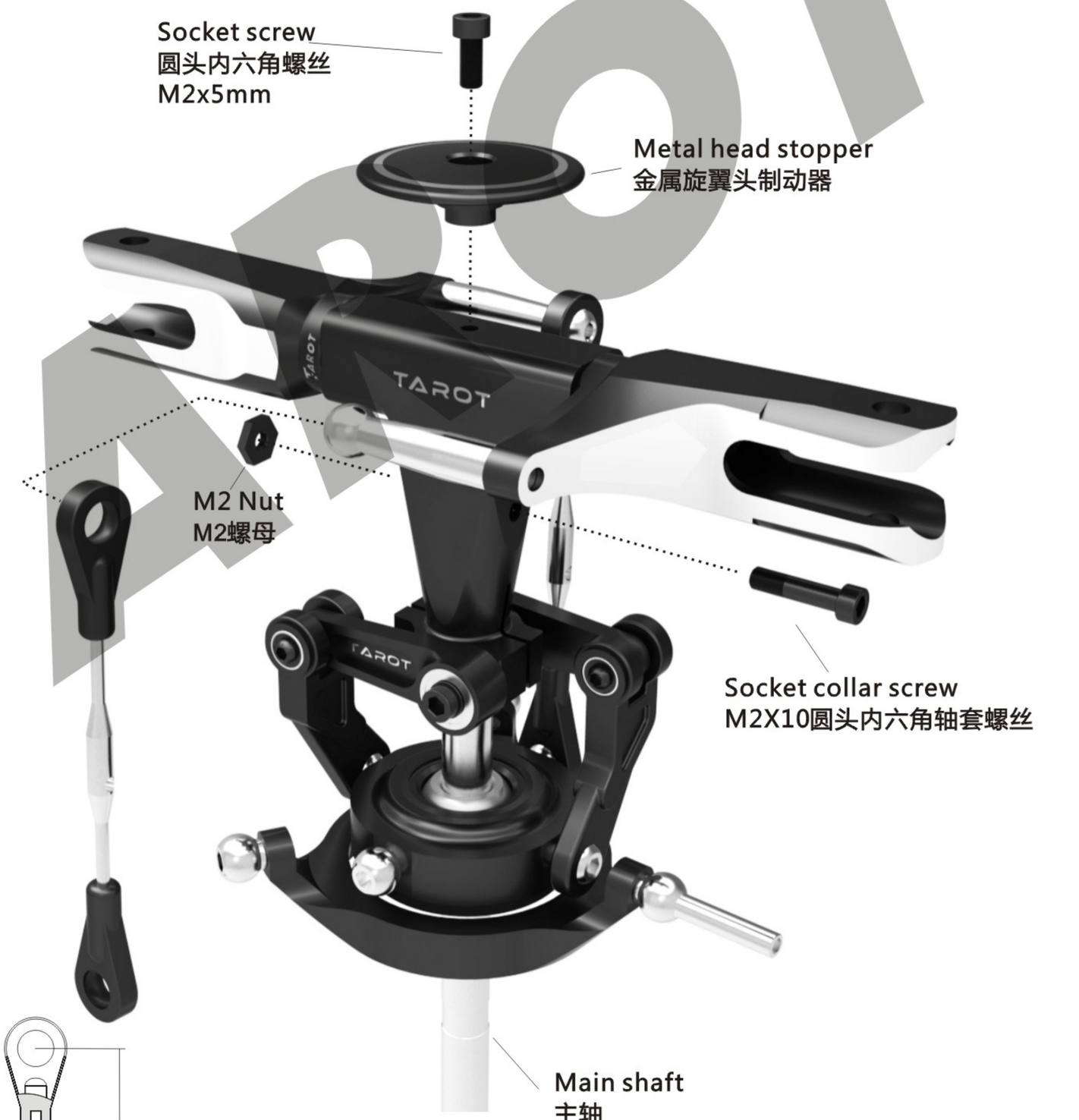

Socket screw
圆头内六角螺丝
M2X5mm

Socket button head screw
半圆头内六角螺丝（#0X4mm）X4

Socket screw
圆头内六角螺丝（M2X12mm）X2

Bearing
轴承（Ø2XØ5XØ6X2.3mm）X4

Bearing
轴承（Ø1.5XØ4X2mm）X4

Washer
華司（Ø2XØ3.6X0.2mm）X2

Linkage ball A(M2X2.5)
圆头A(M2X2.5)(Ø4.75X7.18mm)X6

Long Linkage ball A(M2X2.5)
导板长球头(M2X2.5)(Ø4.75X19.68mm)X1

Socket collar screw
圆头内六角配套螺丝（M2X10mm）X1

M2 Nut
M2螺帽X1

CAUTION
注意

For origin al manufactory pack age, if the product is already assembled by Factory,Please check again if screws are firmly secured and applied with some glue.
原厂零件出厂包装如果是组装品,请需再确认各螺丝是否锁紧上胶。

Apply a little am ount of T43 thread lock when fixing a metal part
螺丝胶附于金属件请使用适量T43(螺丝胶)

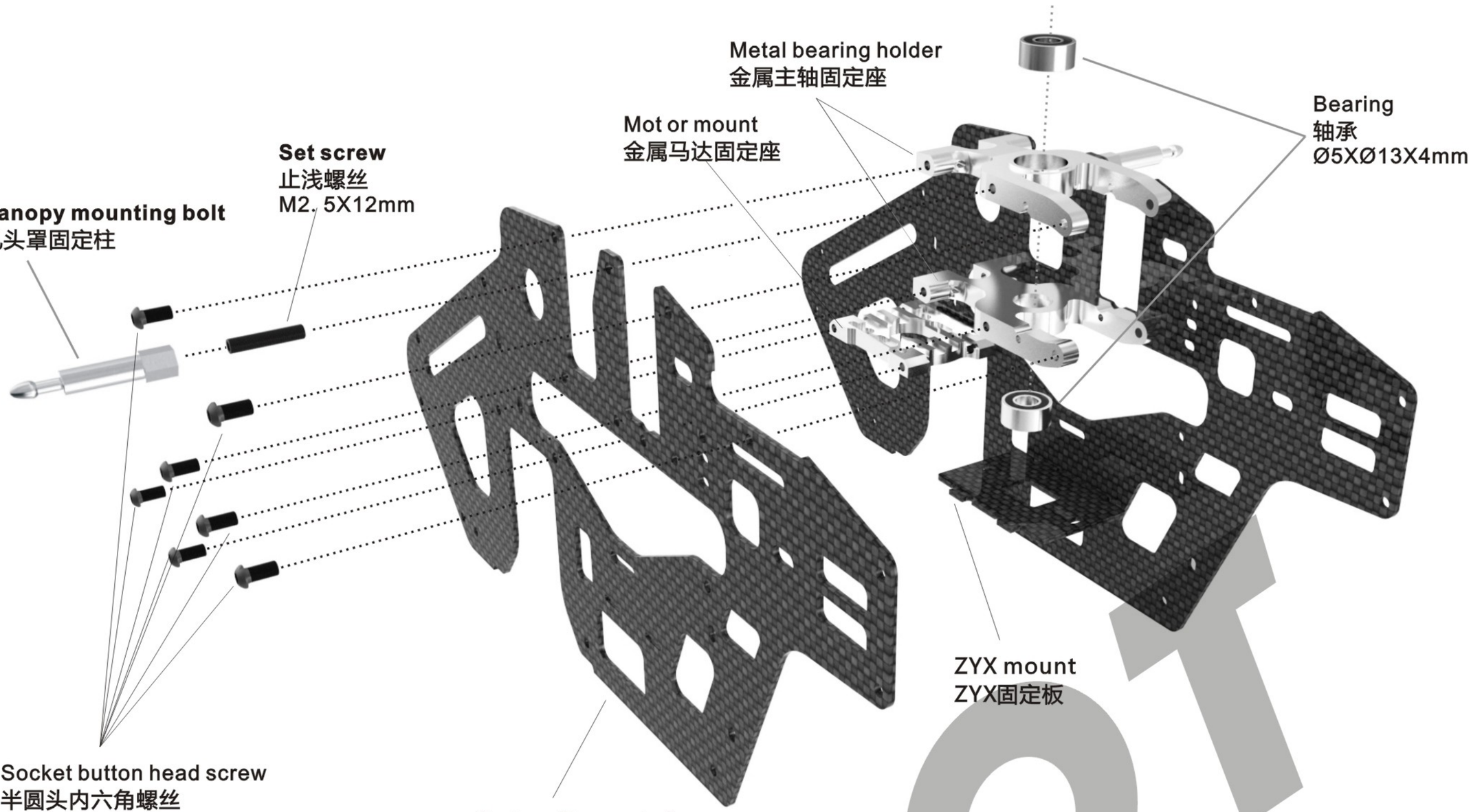

TAROT

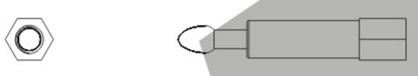

Canopy mounting bolt
机头罩固定柱（4X24mm）X2

M2.5 Set screw
M2.5止浅螺丝(M2.5X12mm)X2

Socket butt on head screw
半圆头内六角螺丝(2.5X5mm)X14

Bearing
轴承(Ø5XØ11X5mm)X2

Skid mount
金属脚架固定座

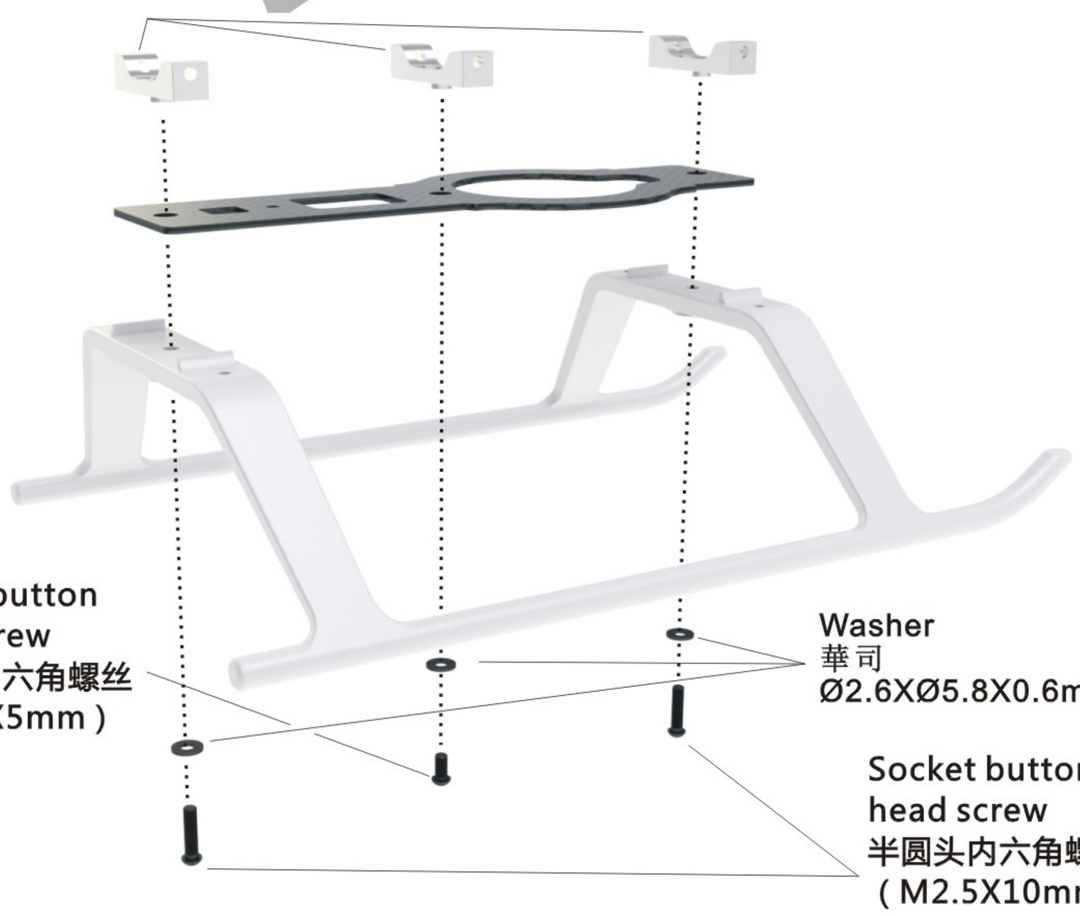

Socket button head screw
半圆头内六角螺丝
（M2.5X5mm）

Washer
華司
Ø2.6XØ5.8X0.6mm

Socket button head screw
半圆头内六角螺丝
（M2.5X10mm）

Socket button head screw
半圆头内六角螺丝(M2.5X10mm)X2

Socket butt on head screw
半圆头内六角螺丝(2.5X5mm)X1

Washer
華司（Ø2.6XØ5.8X0.6mm）X3

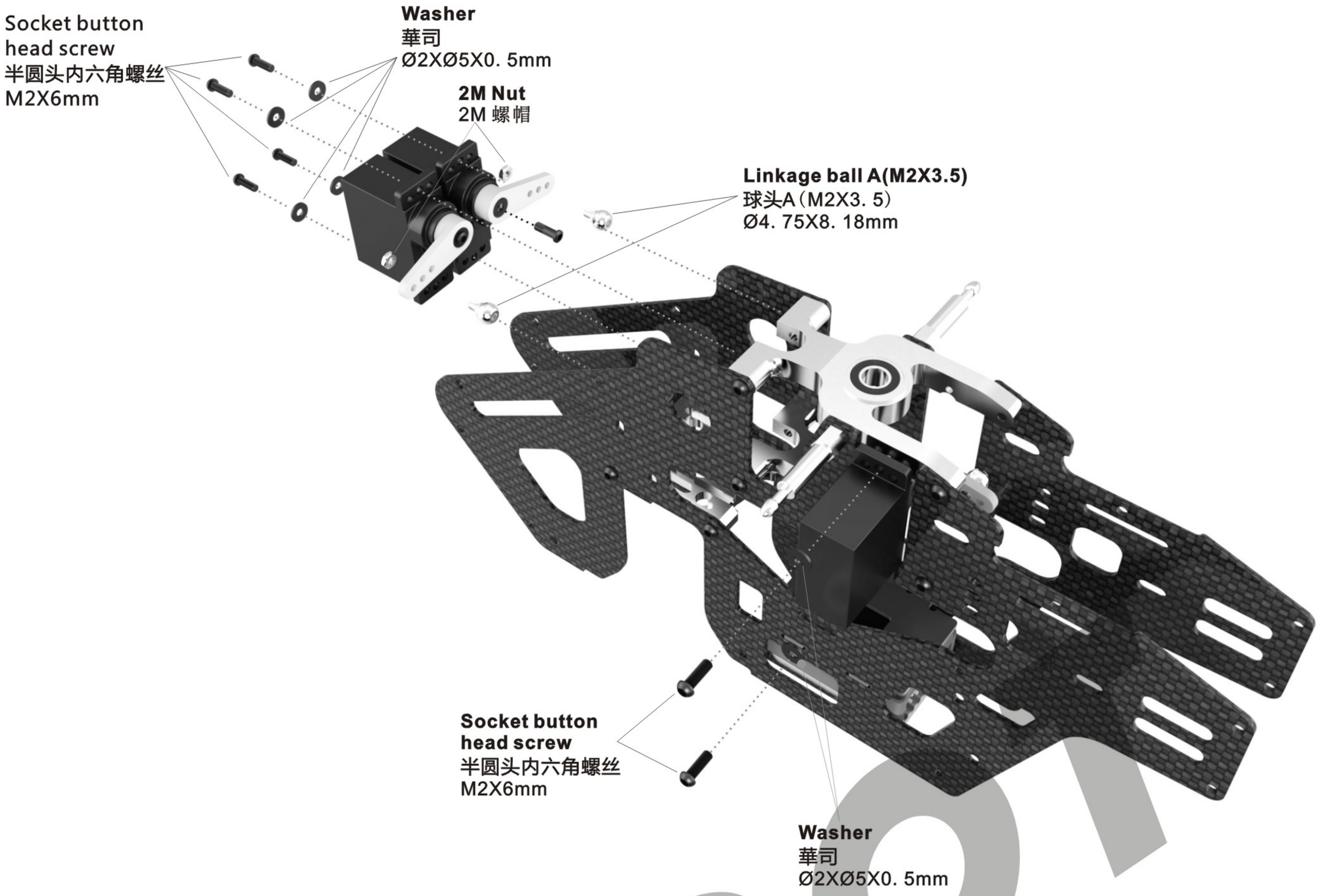

Recommend sanding the marked position with waterproof abrasive paper (#800-1000)as below illustration to avoid the wires of electric parts to be cut.
建议于下图色块表示处，可使用#800~1000水砂纸打磨，可防止电子设备电线被割破

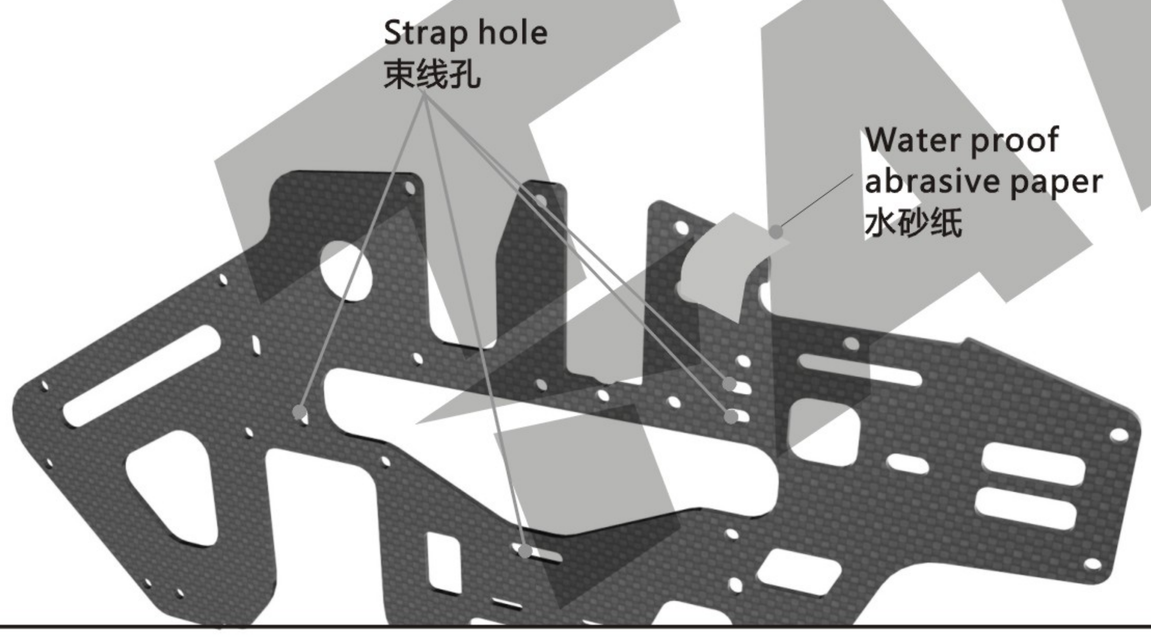

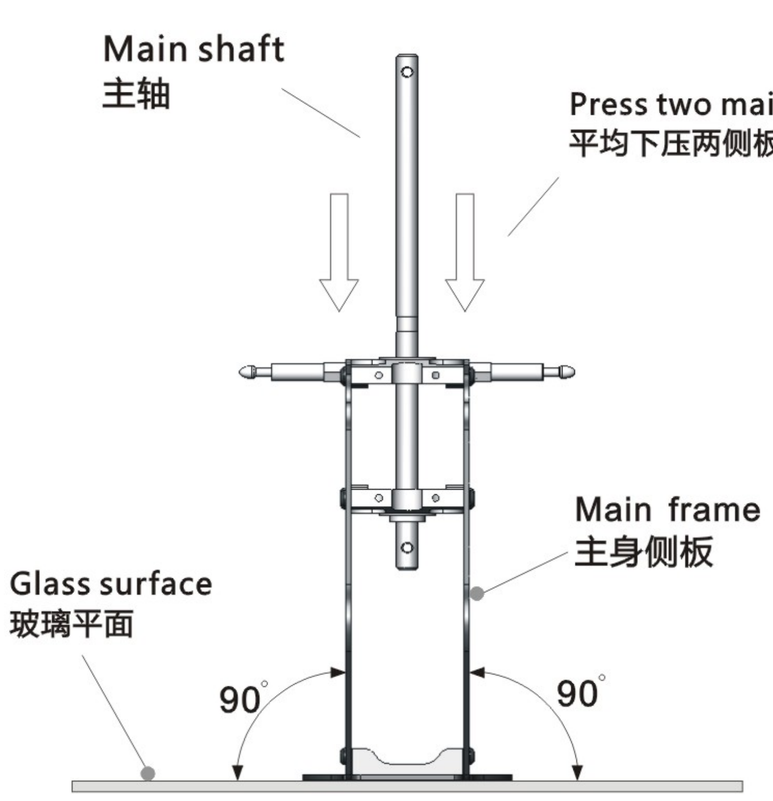

Main frame assembly point:
First do not fully tight en the screws of main frames. Put the main shaft through the two bearings and check if the movements(up/dows)are smooth .The bottom bracket must be firmly touched the level table top(glass surface);please keep the smooth movements on main shaft and level bottom bracket ,then slowly tighten the screws ,A correct assembly can help for the power and flight performance
机身侧板组立重点：
侧板螺丝先不完全锁紧，放入主轴贯穿二颗轴承确认上下移动必须滑顺，主体底板必须与水平桌面（玻璃平面）踏实紧贴；清保持主轴滑顺与底板平行桌面后慢慢头紧螺丝。正确侧板的组装对动力与飞行性能有显著帮助

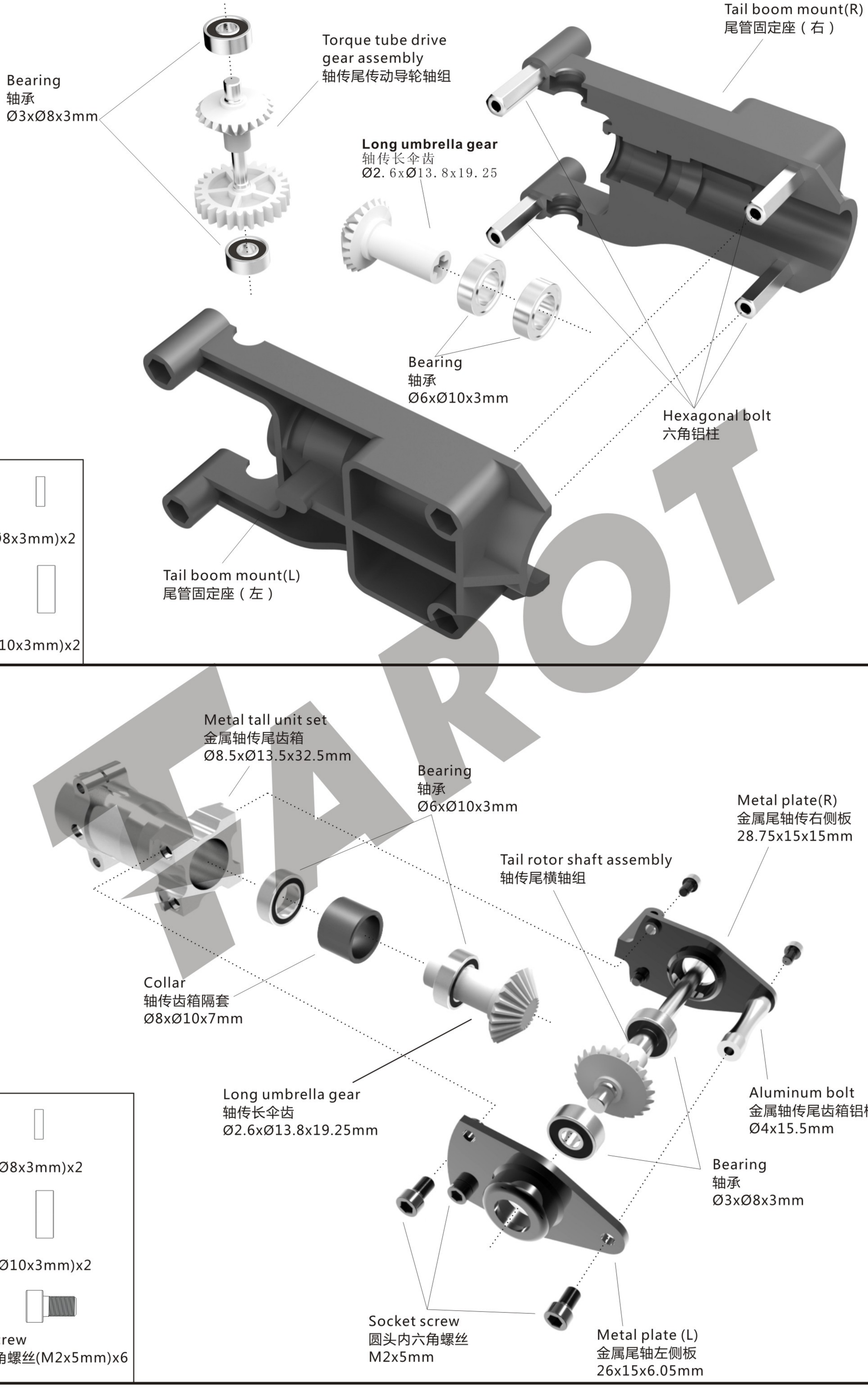
Bearing
轴承
Ø3xØ8x3mm
Torque tube drive
gear assembly
轴传尾传动导轮轴组
Tail boom mount(R)
尾管固定座（右）
Long umbrella gear
轴传长伞齿
Ø2.6xØ13.8x19.25
Bearing
轴承
Ø6xØ10x3mm
Hexagonal bolt
六角铝柱
Bearing
轴承(Ø3xØ8x3mm)x2
Bearing
轴承(Ø6xØ10x3mm)x2
Tail boom mount(L)
尾管固定座（左）
Metal tall unit set
金属轴传尾齿箱
Ø8.5xØ13.5x32.5mm
Bearing
轴承
Ø6xØ10x3mm
Metal plate(R)
金属尾轴传右侧板
28.75x15x15mm
Tail rotor shaft assembly
轴传尾横轴组
Collar
轴传齿箱隔套
Ø8xØ10x7mm
Long umbrella gear
轴传长伞齿
Ø2.6xØ13.8x19.25mm
Aluminum bolt
金属轴传尾齿箱铝柱
Ø4x15.5mm
Bearing
轴承
Ø3xØ8x3mm
Bearing
轴承(Ø3xØ8x3mm)x2
Bearing
轴承(Ø6xØ10x3mm)x2
Socket screw
圆头内六角螺丝(M2x5mm)x6
Socket screw
圆头内六角螺丝
M2x5mm
Metal plate (L)
金属尾轴左侧板
26x15x6.05mm

TARO

Collar screw
轴套螺丝(M2X6MM)x2

M3 Set screw
M3止洩螺丝(M3x3mm)x1

Collar A
尾连杆头铜套A
(Ø2xØ3x4mm)x2

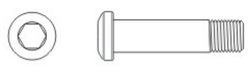

Collar screw
套轴螺丝(M2x8mm)x2

Bearing
轴承(Ø2xØ5x2.5mm)x4

Collar B
尾连杆头铜套B
(Ø2xØ3x2.5mm)x2

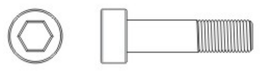

Socket screw
圆头内六角螺丝(M2x9mm)x1

Bearing
轴承(Ø3xØ6x2.5mm)x2

Linkage ball
球头(M2x2.5)
(Ø4.75x7.5mm)x2

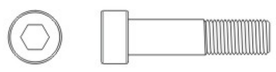

Socket screw
圆头内六角螺丝(M2x8mm)x2

Bearing
轴承(Ø4xØ7x2.5mm)x2

Collar
尾控制组轴承座铝平垫
(Ø4xØ5.1x0.3mm)x1

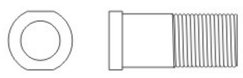

Slide shaft
尾轴滑套x1

Washer
華司(Ø2xØ3.6x0.5mm)x2

Washer
華司(Ø2xØ3.6x0.2mm)x3

CAUTION
注意

While assembly the slide shaft ,please use suitable amount of T43 on the thread. Please do not use R48 avoid damages while maintenance or repairs.
组立尾轴滑套时，请使用少量的T43螺丝胶在螺牙上，严禁使用R48高胶合性轴承胶防止胶合过紧，以避免日后拆修维护零件之损伤。

CAUTION
注意

Aim tail rot or hub at the concave of tail rot or shaft and fix it, please apply a little glue on the set screw.
尾旋翼T型座瞄准尾横轴的凹刻并锁上,
请确认止洩螺丝上胶.

Already assembled by factory, please note to check again.
已组装完成，请务必自行再确认。

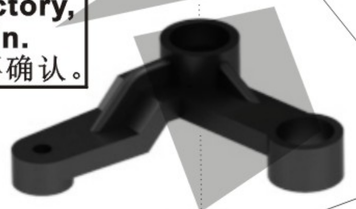

Tail rotor control arm
尾旋翼控制臂

Linkage ball
球头(M2x2.5)
Ø4.75x7.5mm

Collar screw
轴套螺丝
M2x9mm

CAUTION
注意

For original manufactory package ,if the product is already assembled by Factory ,please check again if screws are firmly secured and applied with some glue.
原厂零件出厂包装如果是组装品，请需再确认各螺丝是否锁紧上胶。

When tightening a linkage ball to aplastic part ,please note to use a little CA glue and tighten it firmly, but not over tightened, or they will strip.
球头锁入塑胶件请务必注意，使用少量的CA胶并舍当用力锁紧即可，而过力的扭紧可能会导致滑丝。

Care must be taken during assembly to ensure tail grips operate smoothly without binding. Any slight binding may affect tail action during flight.
组装时，确认尾夹座滑顺，些微干涉将可能导致飞行时尾动作不顺畅。

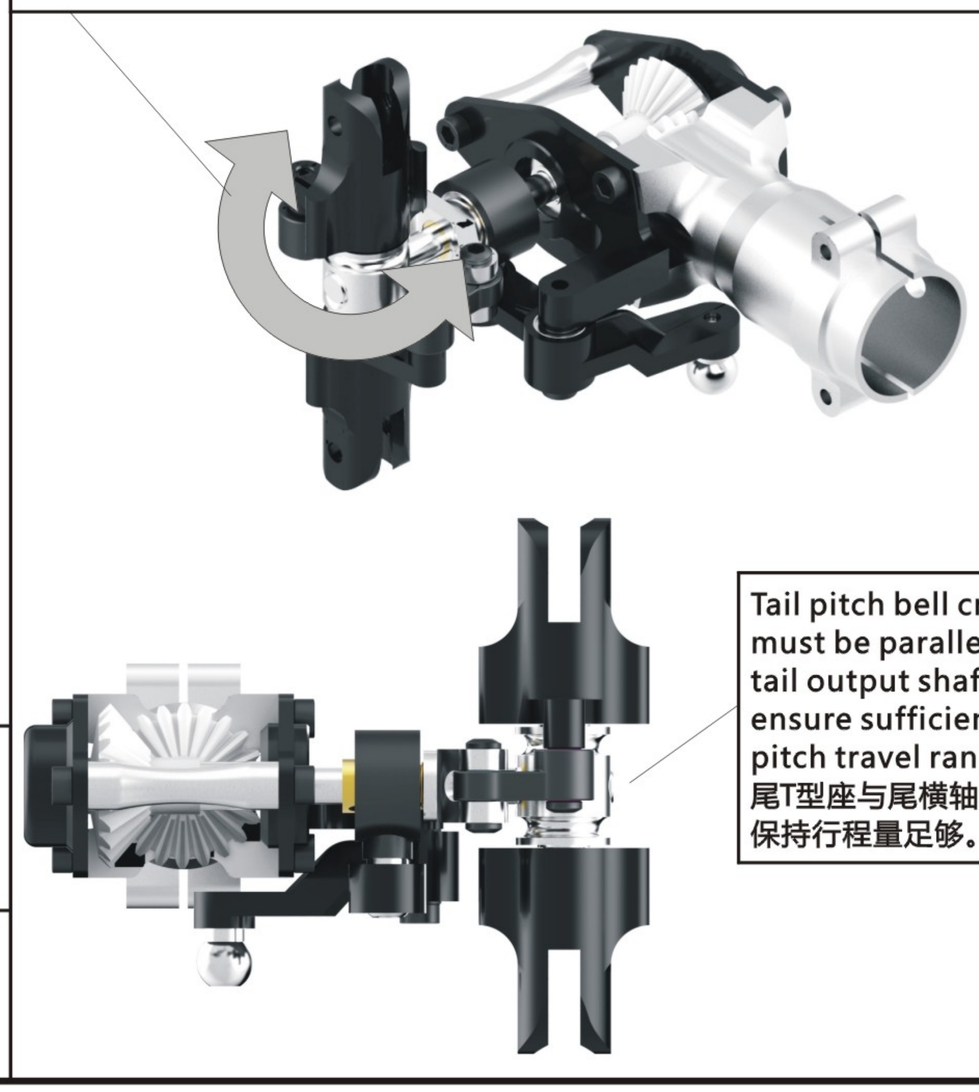

Tail pitch bell crank must be parallel to tail output shaft to ensure sufficient pitch travel range.
尾T型座与尾横轴平齐以保持行程量足够。

Apply a little am ou nt of T43 thread lock when fixing a metal part
螺丝胶附于金属件请使用适量T43(螺丝胶)

When assembling into the tail boom, please apply some oil on the surface, to make it smooth during the assembling and keep it vertical with the tor que tube for smooth rotation.
插入尾管内时，外表抹些润滑油，以确保平顺压入尾管中并与尾传动轴保持垂直，让尾轴传动顺畅.

Already assembled by factory, please note to check again.
已组装完成，请务必自行再确认。

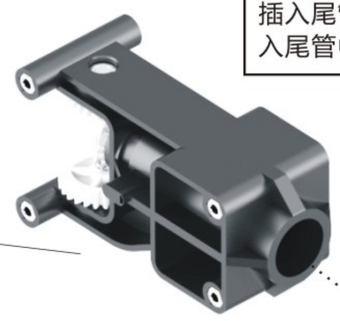

Torque tube
尾传动轴杆

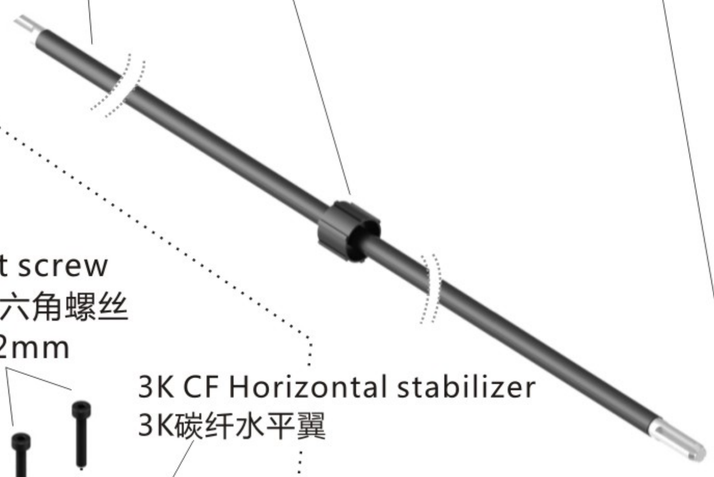

Tail blade
尾旋翼

Ball link
连杆头

Tail control guide
尾控制杆固定环

Socket screw
圆头内六角螺丝
M2x12mm

3K CF Horizontal stabilizer
3K碳纤水平翼

Collar screw
轴套螺丝
M2x8mm

Rudder control rod
尾舵控制连杆
Ø1.3x330mm

Tail boom
尾管
347mm

Meatl stabilizer mount (Upper)
金属水平翼固定上座

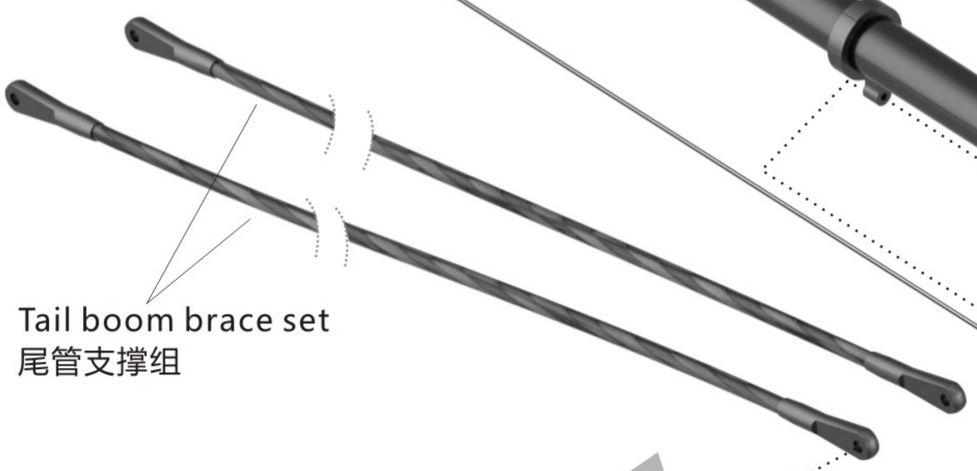

Tail boom brace set
尾管支撑组

Socket screw
圆头内六角螺丝
M2x18mm

Vertical stabilizer mount
垂直固定座

Ball link
连杆头

3K CF Vertical stabilizer
3K碳纤直翼

Socket butt on head screw
半圆头内六角螺丝
M2.5x6mm

Metal stabilizer mount(Lower)
金属水平翼固定下座

Before assembling ,please wrap the tail boom with a scotch tape (Thickness 0.03~0.05mm) to avoid the mount slipping.
安装前请先用透明胶带(0.03~0.05mm厚)包裹尾管可防止固定座滑动.

Tip to fix the torque tube 传动轴轴承固定要领

Please apply some CA glue to fix MR84ZZ bearing on the torque tube , avoid CA glue adhering to the dust cover ro it may cause the bearing stuck .When assembling into the tail boom ,please apply some oil on the bearing holder and press the holder into the tail boom horizontally.
请以少量CA将MR84ZZ轴承固定于尾传动轴上，避免CA粘到轴承的防尘盖而导致轴承卡死,插入尾管内时,尾传动轴承垫圈外表抹些润滑油.将为传动轴承圈平行压入尾管中不可歪斜.

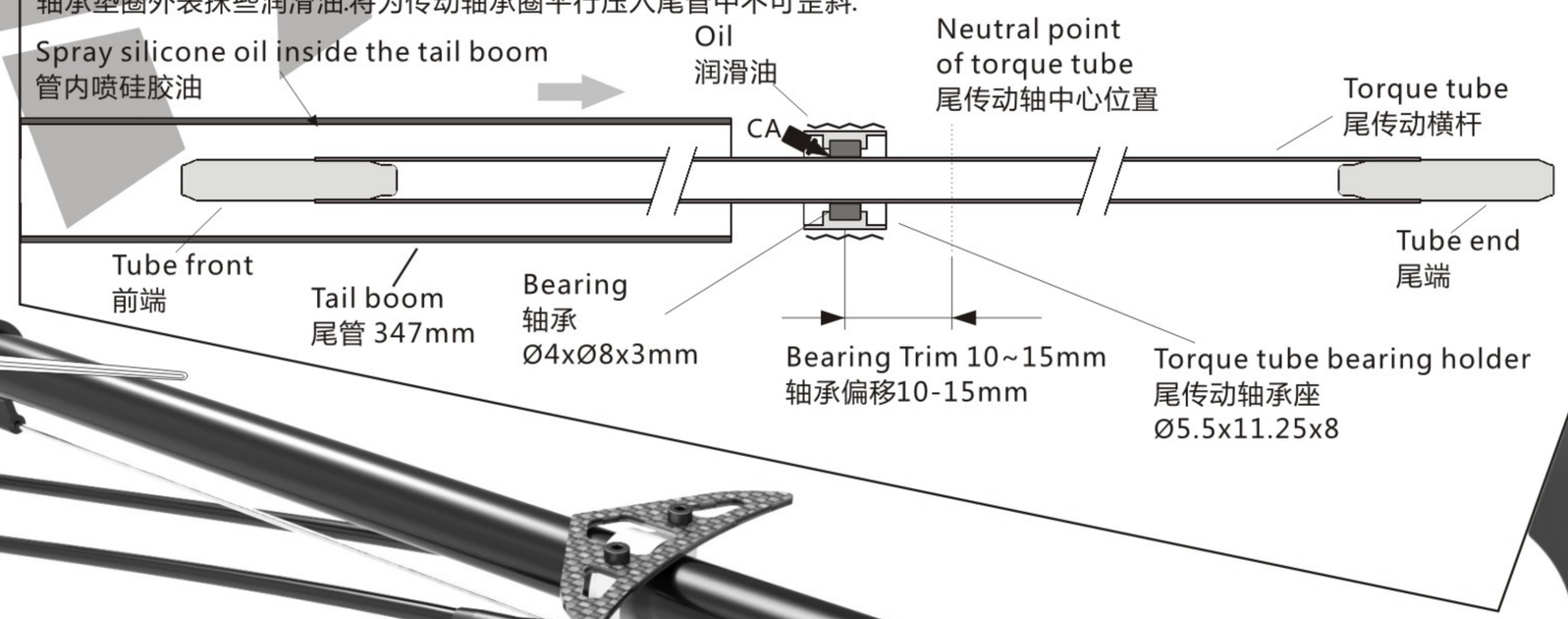

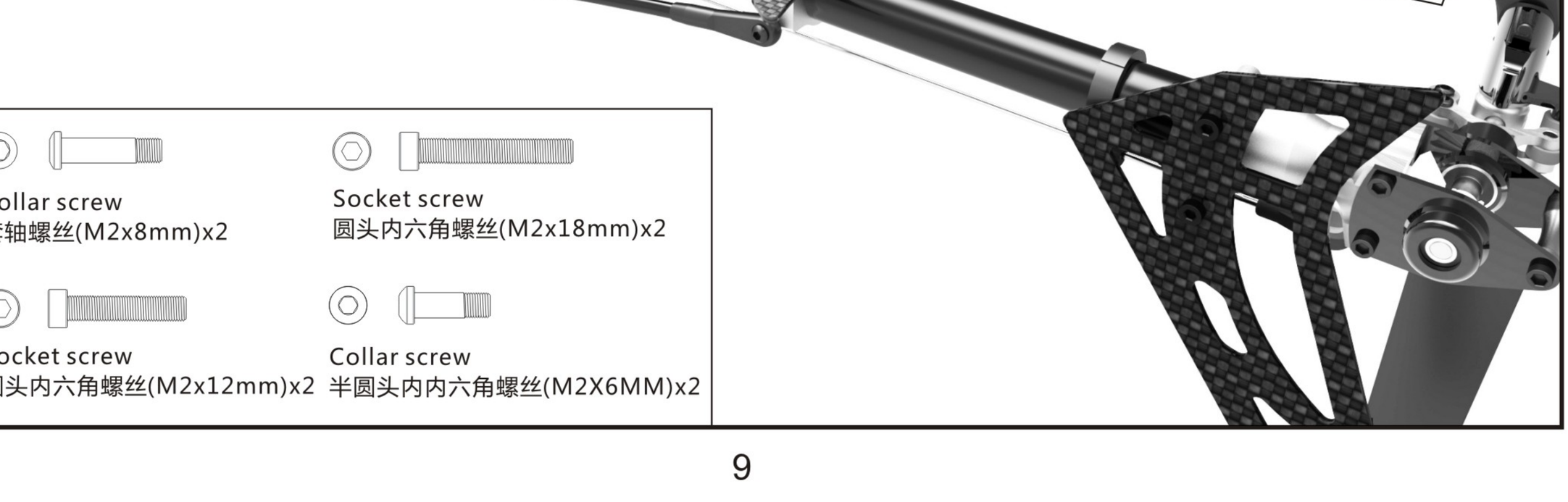

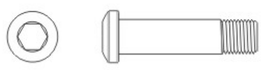

Collar screw
套轴螺丝(M2x8mm)x2

Socket screw
圆头内六角螺丝(M2x18mm)x2

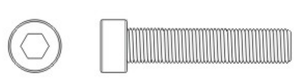

Socket screw
圆头内六角螺丝(M2x12mm)x2

Collar screw
半圆头内内六角螺丝(M2X6MM)x2

CAUTION
注意

When tightening a screw to a plastic part,please tighten it firmly,but not over tightened, or they will strip.
螺丝锁入塑料件务必注意，适当扭力锁紧即可，而过紧的扭力可能会导致滑牙。

Linkage rod(M)
Approx.33mm x 3(118mm Main shaft)
连杆(M)33mm x 3(118mm主轴)

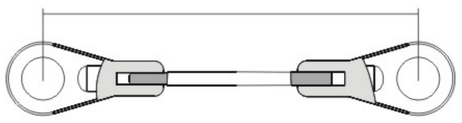

Linkage rod(M)
Approx.31mm x 3(116mm Main shaft)
连杆(M)31mm x 3(116mm主轴)

Linkage rod (M)
连杆(M)Ø1.3x19mm x 3

Ball link
连杆头 x 6

Please do not over tighten, a over tighten may cause the autorotation tall drive gear deformed.
请适当的扭力锁住即可，过度锁紧易造成尾传动主齿变形

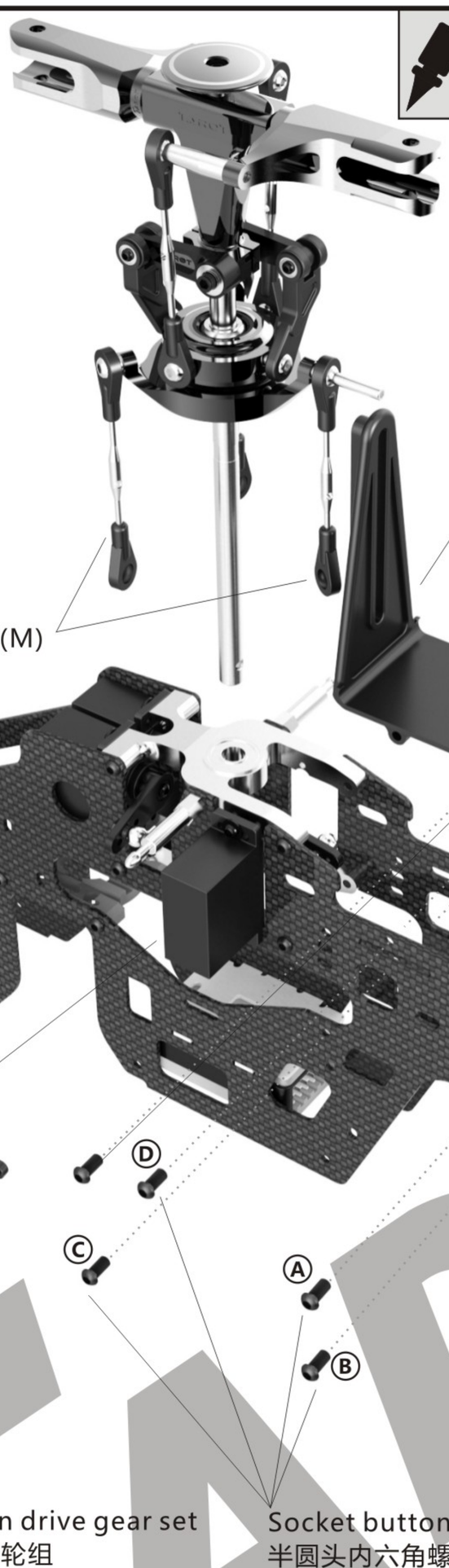

Apply a little am ou nt of T43 thread lock when fixing a metal part
螺丝胶附于金属件请使用适量T43(螺丝胶)

Anti rotation bracket
十字盘导板

Socket button head self tapping screw
半圆头内六角自攻螺丝
T2.6x6mm

Linkage rod(M)
连杆(M)

Socket button head screw
半圆头内六角螺丝
M2.5x5mm

Socket collar screw
圆头内六角轴套螺丝
M2X12mm

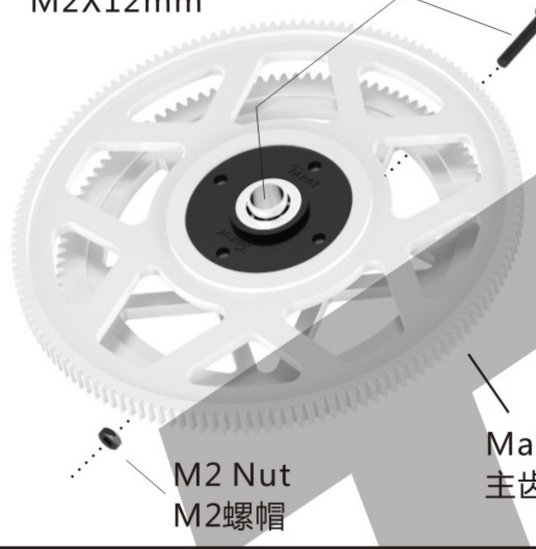

M2 Nut
M2螺帽

Main drive gear set
主齿轮组

Socket button head screw
半圆头内六角螺丝
M2.5x5mm

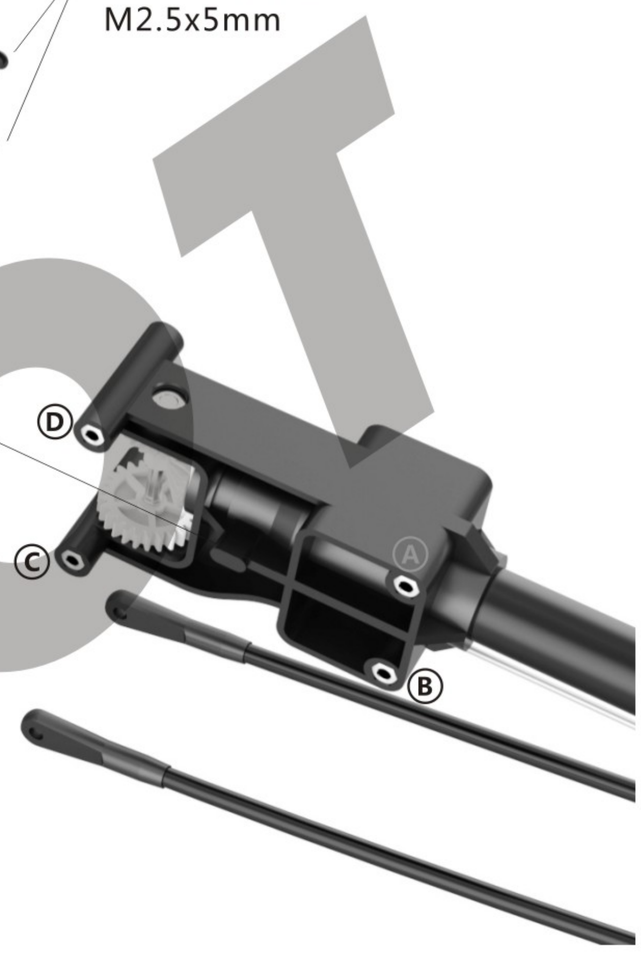

Socket button head self tapping screw
半圆头内六角自攻螺丝
(T2.6x6mm)x2

Socket button head screw
半圆头内六角螺丝(M2.5x5mm)x10

Socket Collar screw
圆头内六角轴套螺丝
(M2x12mm)x1

M2 Nut
M2螺帽x1

Cross screw
平头十字螺丝
M2x4mm

One-way Shaft ring
单向轴套圈
Ø6xØ8x1.6mm

Main gear case
主齿中心座
Ø10xØ21.5x7.8mm

Main drive gear
主齿轮
150T

R48

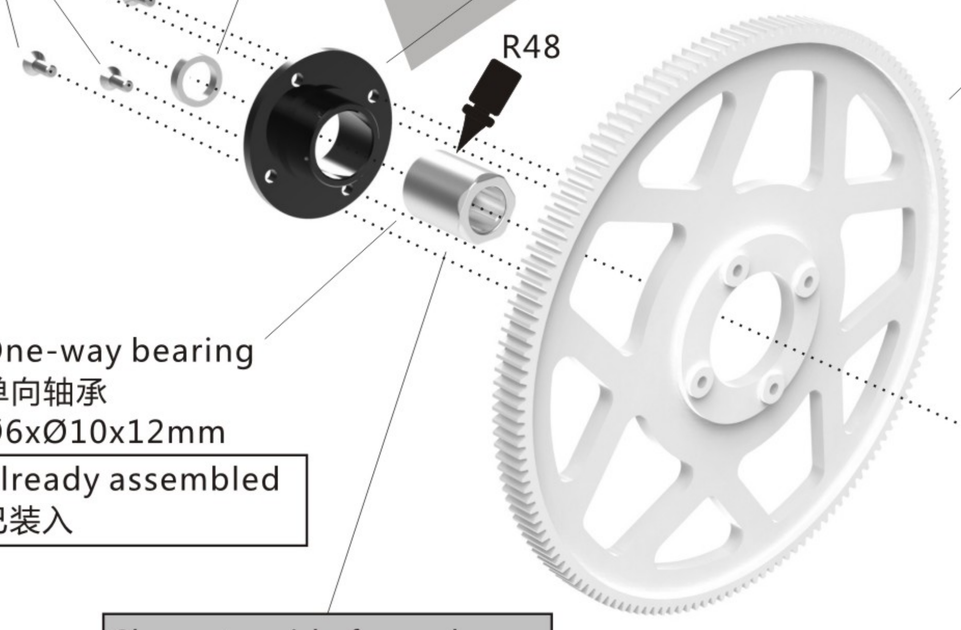

One-way bearing
单向轴承
Ø6xØ10x12mm

Already assembled
已装入

Character side faces down
六角刻字朝下

OIL
润滑油

One-way bearing shaft
单向轴承套
Ø5xØ6x21.5mm

Autorotation tail drive gear
尾传动主齿
106T

Cross screw
平头十字螺丝(M2x4mm)x4

Shaft ring
单向轴套圈(Ø6xØ8x1.6mm)x1

Apply a little am ount of T43 thread lock when fixing a metal part
螺丝胶附于金属件请使用适量T43(螺丝胶)

Carbon fiber blade
碳纤主旋翼

Socket collar screw
圆头内六角轴套螺丝
M3x16mm

For motor fixing
马达固定螺丝

M3 Nut
M3防松螺帽

Washer
華司

ESC

Battery mount
电池固定座位

Use Adhesive foam or
Hoop & Loop tael to fix
以泡棉双面胶或魔术粘固定。

Socket button head
self tapping screw
半圆头内六角自攻螺丝
T2.6x6mm

Socket button
head screw
半圆头内六角螺丝
M2.5x5mm

Socket button head screw
半圆头内六角螺丝
M2.5x8mm

M3 Set screw
M3止洩螺丝(M3x3mm)x1

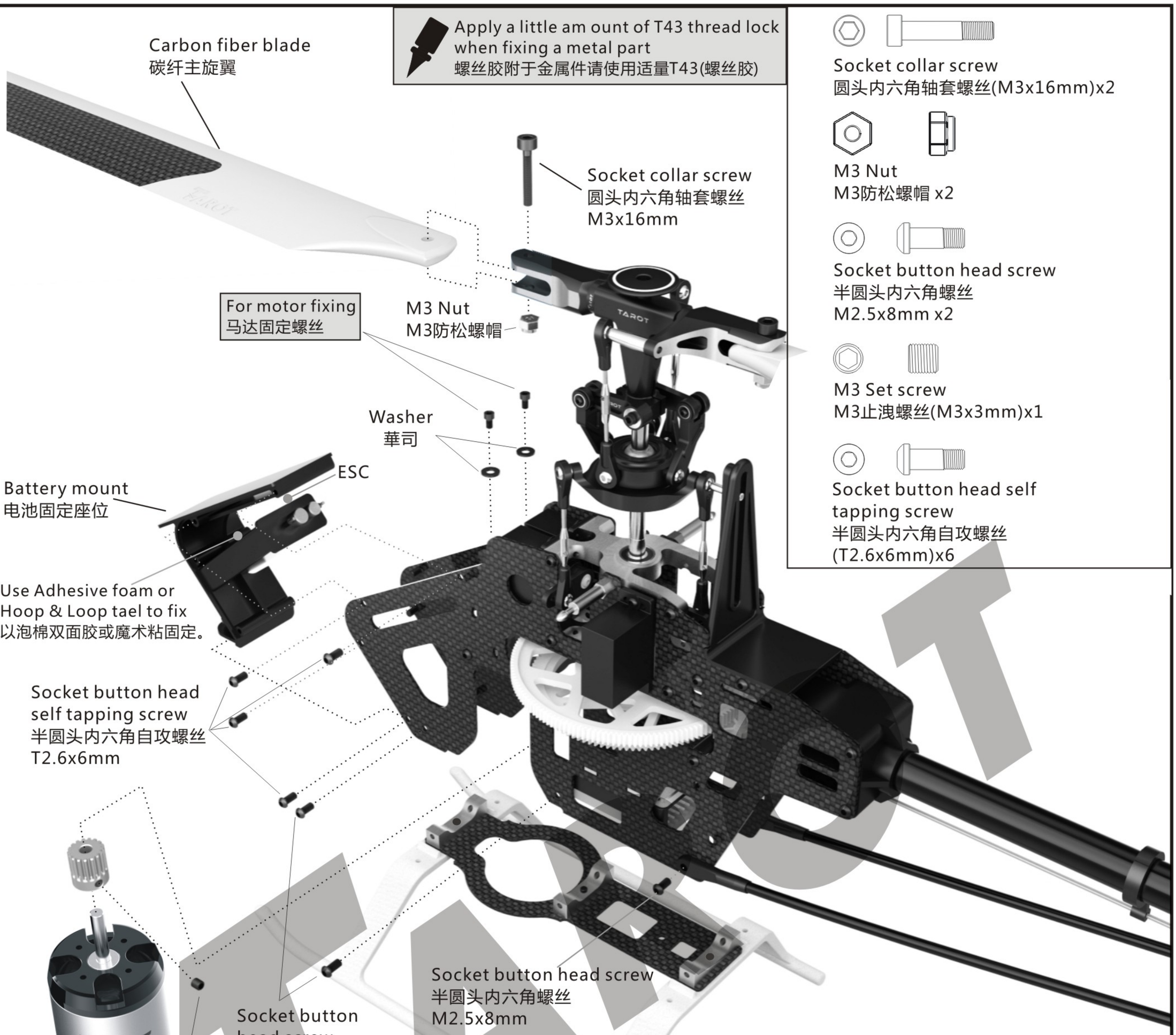

Socket collar screw
圆头内六角轴套螺丝(M3x16mm)x2

M3 Nut
M3防松螺帽 x2

Socket button head screw
半圆头内六角螺丝
M2.5x8mm x2

M3 Set screw
M3止洩螺丝(M3x3mm)x1

Socket button head self
tapping screw
半圆头内六角自攻螺丝
(T2.6x6mm)x6

Socket button head screw
半圆头内六角螺丝
M2.5x5mm x4

Make sure the motor pinon gear parallel(match)
evenly with the main gear while assembly.
组装时，马达齿轮与主齿轮平高。

Set the motor pinion gear to main drive gear mesh to approximately0.1mm
to avoid excess power consumption or motor burnt due to overload
马达前后可移动保持两齿轮咬合处约有0.1mm间隙，过紧齿咬合将造成动力损失或马达高阻力的过载，严重可能导致马达烧毁。

ZYX Flybarless Sensor
ZYX 无平衡翼系统

Washer
華司
Ø2.6xØ5.8x0.6mm

Socket button head self tapping screw
半圆头内六角自攻螺丝
(T2.6x6mm)

Linkage ball A(M2X3.5)
球头A（M2X3. 5）
Ø4. 75X8. 18mm

Servo horn
伺服臂

ZYX foam tape
ZYX 泡棉

Tail Servo
尾舵伺服器

Tail servo mount
尾私服器固定座

Socket button head self tapping screw
半圆头内六角自攻螺丝
(T2.6x6mm)

Socket button head self tapping screw
半圆头内六角自攻螺丝
(T2.6x6mm) x 4

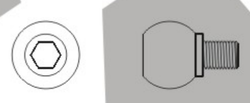

Linkage ball A(M2X2.5)
圆头A(M2X2.5)(Ø4.75X7.18mm)X1

Washer
華司(Ø2.6xØ5.8x0.6mm)x4

M2 Nut
M2螺帽 x1

Using the included foam tape on battery mount will effectively reduce vibration of canopy.
以随附泡棉胶固定于电池座，能有效降低机头罩震动。

Canopy
机头罩

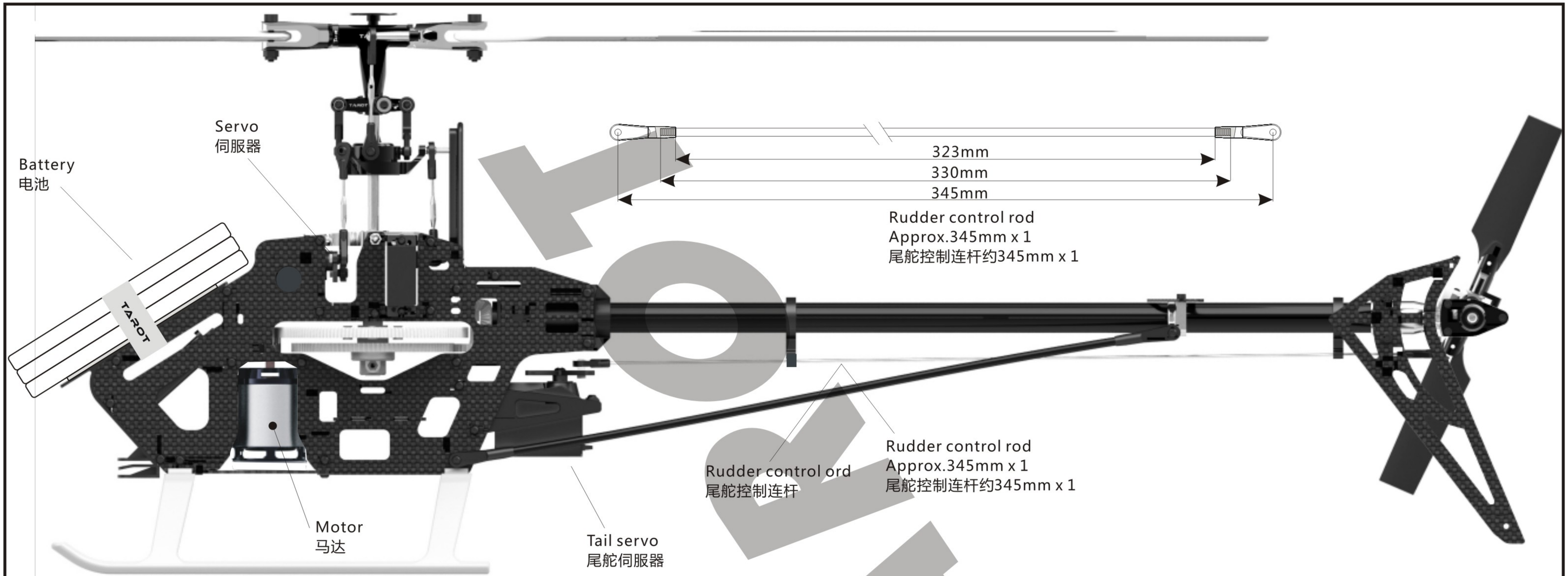
Servo
伺服器
Battery
电池
323mm
330mm
345mm
Rudder control rod
Approx.345mm x 1
尾舵控制连杆约345mm x 1
Rudder control ord
尾舵控制连杆
Rudder control rod
Approx.345mm x 1
尾舵控制连杆约345mm x 1
Motor
马达
Tail servo
尾舵伺服器

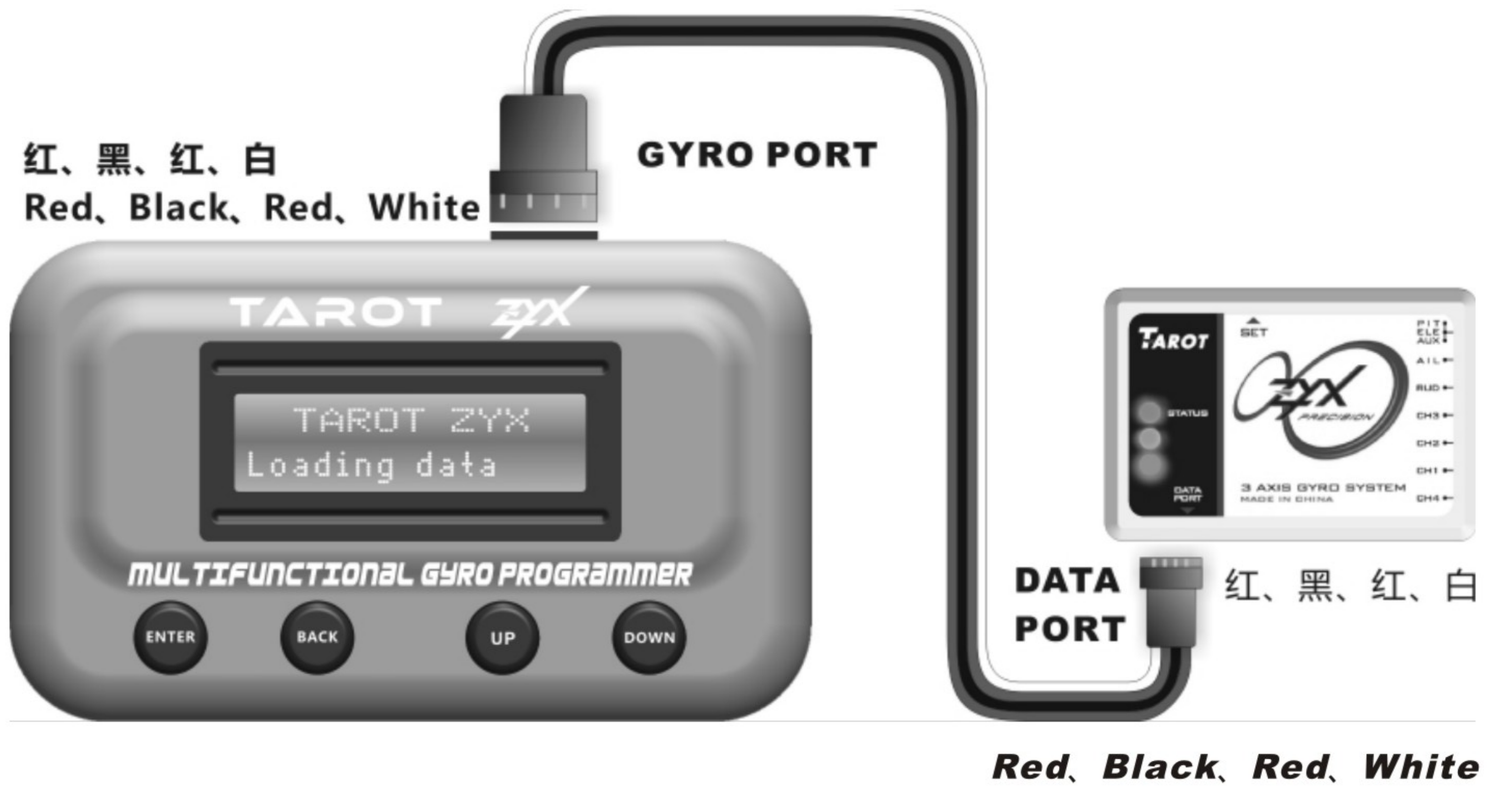
红、黑、红、白
Red、Black、Red、White
GYRO PORT
TAROT ZYX
Loading data
MULTIFUNCTIONAL GYRO PROGRAMMER
ENTER
BACK
UP
DOWN
DATA PORT
红、黑、红、白
Red、Black、Red、White

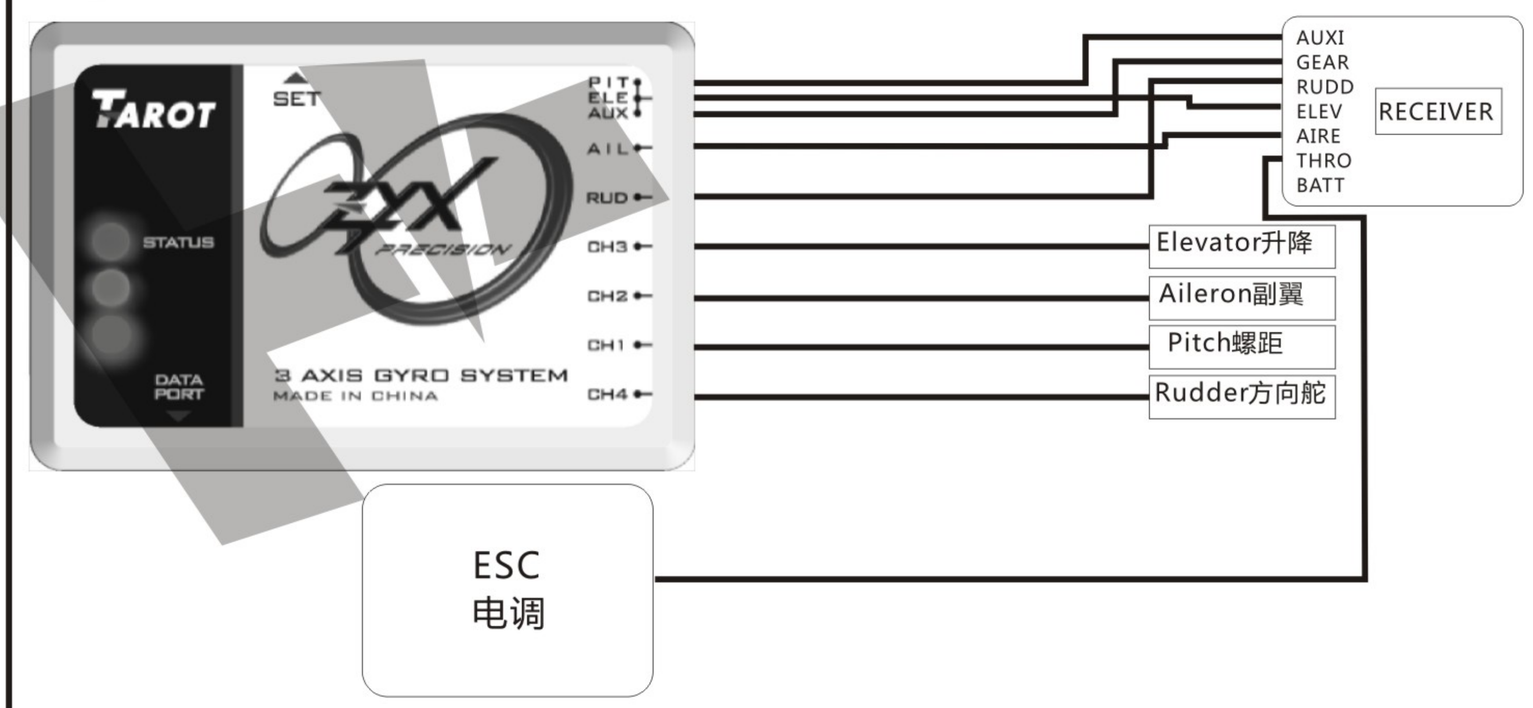
TAROT
SET
STATUS
DATA PORT
3 AXIS GYRO SYSTEM
MADE IN CHINA
AUXI
GEAR
RUDD
ELEV
AIRE
THRO
BATT
RECEIVER
Elevator升降
Aileron副翼
Pitch螺距
Rudder方向舵
ESC
电调

TAROT

Q & A 1	**Pitches up during fast forward flight.** (1) gyro pitch gain too low, increase the pitch gain (2)Elevator trim not centered.Check if helicopter is tilting backwards during hover. 快速飞行时直升机机头会上扬**?** (1)俯仰（Pitch）感度不足,请调高俯仰（Pitch）感度 (2)十字盘升降舵中立点不对,请测试停悬时,直升机中立点是否朝后.
Q & A 2	**Insufficient gain during flight,but increasing gain results in oscillation.** (1)Check and resolve possible mechanical vibration from helicopter. (2)Use softer ZYX mounting foam,or double up the stock ZYX foam. (3)Relocate the ZYX to location less prone to vibration. 飞行时感度不足,将感度调高直升机却会抖动**?** (1)检查直升机是否有异常震动,如果是请先修复机体. (2)用材质较软或两片双面胶泡棉固定ZYX陀螺仪 (3)将ZYX换装于直升机较不震动的位置.
Q & A 3	**Dirfting during 3D maneuvers.** (1)Incerase roll and pitch gain. (2)Check if cyclic servos are too low(minimum 0.1sec/60degrees) **3D**飞行时有漂移现象**?** (1)调高滚转与俯仰感度. (2)检查推动十字盘的伺服器是否过慢(建议选择动作速度0.1sec/60度以内规格).
Q & A 4	**Unstable hover,control inputs are too sensitive.** Decrease the aileron and elevator ATV(AFR) value on the transmitter. In addition,exponential can be added to aileron and elevator channels. 停悬时不稳定,有动作过灵敏现象**?** 可调低遥控器AIL及ELE的ATV(AFR)值，并增加EXP的设定,以提高停悬的稳定性.
Q & A 5	**After increasing the ATV(AFR) of aileron and elevator,3D roll rates are still not enough.** Enter the setup menu of ZYX,increase the roll and pitch limit of swashplate 已调高**AIL**及**ELE**的**ATV(AFR),**但**3D**飞行的滚转速率却无法提高**?** 进入ZYX陀螺仪调试菜单，调大十字盘副翼和升降舵的舵机行程
Q & A 6	**Helicpoter oscillates after fast forward flight or after tumbles.** (1)Gradually reduce both roll and pitch gain of ZYX. (2)Use harder head dampener. 直升机高速飞行或滚动后停止时,机身会有轻微抖动现象**?** (1)调低ZYX上的俯仰和滚转感度 (2)主旋翼横轴及主轴连结的橡胶过软,请换用较硬的橡胶.
Q & A 7	**Can't enter the system menu or setup menu.** Check of the setting of endpoint and dual rate setting on transmitter. 不能进入**ZYX**的系统菜单或者调试菜单 请检查发射机的各通道行程及Dual Rate设置是否过小。
Q & A 8	**Incorrect CCPM mixing.** (1)Set the swashplate mode as a no mixing mode（Futaba：H1；JR：1 servo NORM）in your transmitter. (2) Select correct swashplate type in ZYX (3)Please turn off the swash ring,Linkage Compensation,Swash Mix,Mixing,Acceleration and other collective mixing functions in the transmitter. **CCPM**混控动作不正常**?** (1)发射机中选择没有任何混控功能的倾斜盘模式 (2)ZYX中的十字盘类型选择是否正确 (3)请关闭遥控器内Swash ring、Linkage Compensation、Swash Mix、Mixing、Acceleration等混控功能.
Q & A 9	**ZYX unable to power up.** (1)Check proper voltage source. (2)Check the connection of ZYX and receiver. **ZYX** 上电工作不稳定 (1)检查系统电源是否正常. (2)检查ZYX与接收器间连线是否正常连接.
Q & A 10	**ZYX powers up with LED flashing,but red LED keep flashing,unable to work** (1)Possible movement during initialization process.Make sure helicopter is absolutely stationary. **ZYX** 开机后闪灯正常,然后红灯一直闪烁，无法正常工作**?** (1)开机时直升机必须完全静止,才可顺利开机.
Q & A 11	**I noticed swashplate tilts slightly at extreme pitch due to servo interactions,should I make efforts to level it out?** No.Level the swashplate at 0 degrees when center the collective pitch stick, End point swashplate interactions are automatically compensated by the ZYX while in flight. 十字盘移动到最高与最低位置时会有些微倾斜,我能尝试将它修正调整到水平吗**?** 否.油门摇杆在中间时将十字盘调整至水平即可，实际飞行时,ZYX会自动修正十字盘的混控位差.
Q & A 12	**What adjustments can I make on the transmitter after setup has been completed?** You can adjust the,trim,subtrim,dual rates,exponential,collective pitch 设置完成后，有哪些发射机的调整功能是我能使用的**?** 一般开机模式下,你仍然可以使用以下几个功能调整直升机：微调（trim,subtrim,）舵面大小动(dual rates,expomemtial) 集体螺距(collective pitch)

	Problem 状 况	Cause 原 因	Solution 对 策
Blade Tracking 双桨平衡	Tracking is Off 双桨	Pitch linkage rods are not even length PITCH连杆长度调整不均匀	Adjust length of pitch linkage rods (A) 调整连杆(A)长度
Hover 停悬	Headspeed too low 主旋翼转速偏低	Excessive pithc 主旋翼的PITCH偏高	Adjust pitch linkage rods(A) to reduce pitch by 4 to 5degrees.Hovering headspeed should be around 1900RPM. 调整连杆(A)调低Pitch约+4~5度 (停悬时主旋翼需为约1900RPM)
		Hovering throttle curve is too low 停悬点油门曲线过低	Increase throttle curve at hovering point on transmitter (around 65%) 调高停悬点油门曲线(约65%)
	Headspeed too high 主旋翼转速偏高	Not enough pitch 主旋翼的PITCH偏低	Adjust pitch linkage rods(A) to increase pitch by 4 to 5 degrees.Hovering headspeed should be around 1900RPM. 调整连杆(A)调高Pitch约+4~5度 (停悬时主旋翼需为约1900RPM)
		Hovering throttle curve is too high 停悬点油门曲线过高	Decrease throttle curve at hovering point on transmitter (around 65%) 调低停悬点油门曲线(约65%)
Rudder Response 尾舵反应	Drifting of tail occurs during hovering,or delay of rudder response when centering rudder stick 停悬时尾翼向某一边偏移,或拨动方向舵并回复到中立点时,尾翼产生延迟,无法停顿在所控制位置上.	Rudder neutral point improperly set 尾中立点设定不当	Reset rudder neutral point 重设尾中立点
		ZYX yaw gain too low ZYX尾舵感度偏低	Increase ZYX yaw gain 增加ZYX尾舵感度
	Tail oscillates (hunting,or wags) at hover or full throttle 停悬或全油门时尾翼左右来回摇摆.	ZYX yaw gain too high ZYX尾舵感度偏高	Reduce ZYX yaw gain 降低ZYX尾舵感度
Oscillation during flight 飞行抖动	Forward/aft oscillation when aileron is applied 升降舵打舵动作时,机体前后抖动 Helicopter front bobbles(nods) during forward flight 直线飞行时,机头点头	ZYX pitch gain too high. ZYX俯仰感度偏高,产生追踪现象	Gradually reduce pitch gain of ZYX. 调低ZYX上的俯仰感度
		Worn servo,or slack in control links 伺服器老化,控制结构有虚位	Replace servo,ball link,or linkage balls. 更换伺服器、 连杆头、 球头
	Left/right oscillation when elevator is applied 副翼打舵动作时,机体左右抖动 Elevator input causes helicopter to drift 升降舵动作漂移	ZYX roll gain too high ZYX滚转感度偏高,产生追踪现象	Gradually reduce roll gain of ZYX. 调低ZYX上的滚转感度
		Worn servo,or slack in control links 伺服器老化,控制结构有虚位	Replace servo,ball link,or linkage balls. 更换伺服器、 连杆头、 球头
Control Response 动作反应	Slow Forward/Aft/Left/Right input response 前后左右飞行动作反应偏慢	Roll rate too low 滚转速率偏低	Increase the aileron and elevator ATV(AFR) val ue on the transmitter. 可调高遥控器AIL及ELE的ATV(AFR)值，
	Sensitive Forward/Aft/Left/Right input response 前后左右飞行动作反应偏快	Roll rate too high 滚转速率偏快	Decrease the aileron and elevator ATV(AFR) v alue on the transmitter. 可调低遥控器AIL及ELE的ATV(AFR)值，

TAROT

450 Super Combo PRO FBL

INSTRUCTION MANUAL

Specifications:

Length:645mm
Height:218mm
Main Blade Length:325mm
Main Rotor Diameter:712mm
Tail Rotor Diameter:158mm
Motor Drive Gear:14T
Main Drive Gear:150T
Auto rotation Tail Drive Gear:106T
Tail Drive Gear:25T
Drive Gear Ratio:1:10:4.24
Weight(With Motor):530g

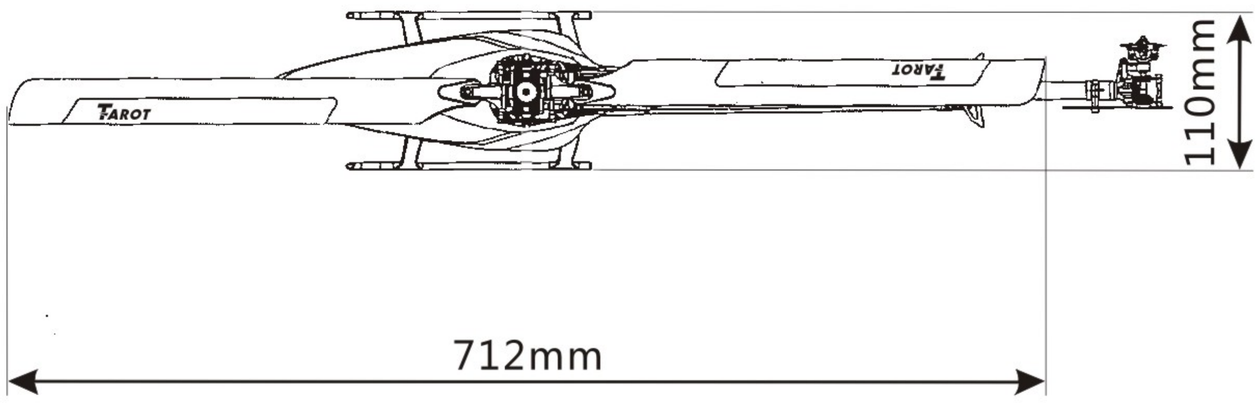

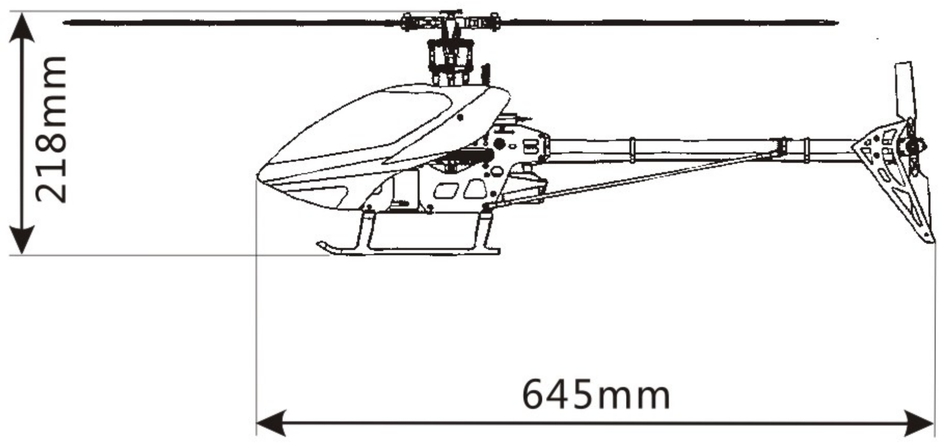

温州飞越航模有限公司
TAROT CORPORATION LIMITED

HTTP:\\WWW.0577MX.COM

MADE IN CHINA
2011.Jan